Level Pressure Flow Temperature Liquid Analysis Registration Systems Components Services Solutions

Technical Information

Prosonic S FMU90

Transmitter in housing for field or top-hat rail mounting for the ultrasonic sensors FDU91/91F/92/93/95/96

Application for level measurement

- Continuous, non-contact level measurement in fluids, pastes, sludge and powdery to coarse bulk materials with 1 or 2 ultrasonic sensors
- Measuring range up to 230 ft (70 m), depending on sensor and material measured
- Level limit detection (up to 6 relays)
- Pump control (alternating)
- Screen and rake control
- Calculations: average, difference, sum

Application for flow measurement

- Flow measurement in open channels and measuring weirs with 1 or 2 ultrasonic sensors
- Simultaneous measurement of level and flow in a stormwater overflow basin with only 1 sensor
- Flow measurement with back water detection (2 sensors) or sludge detection
- Up to 3 (non-resettable) totalizers and 3 (resettable) counters configurable
- Counting or time pulse output for control of external units

Your benefits

- Simple, menu-guided operation with 6-line plain text display
- Envelope curves on the display for quick and simple diagnosis
- Easy operation, diagnosis and measuring point documentation with the supplied "ToF-Tool - FieldTool Package" operating program.
- Temperature dependent time-of-flight correction via the integrated temperature measurement in the sensors
- Linearization (up to 32 points, freely configurable)
- Linearization tables for the most common flumes and weirs pre-programmed and selectable
- Online calculation of the flume-/weir-flows via integrated flow curves
- System integration via HART® or PROFIBUS® DP
- Automatic detection of the sensors FDU91/91F/92/93/95/96
- The sensors of the former series FDU8x can be connected (for certificates see note on page 8)
- Adjustable to the individual requirements via product structure

TI397F/24/ae

Endress+Hauser

People for Process Automation

Table of Contents

Function and system design . . . 3
Measuring principle . . . 3
Blocking distance . . . 3
Time-of-flight correction . . . 3
Interference echo suppression . . . 3
Pump control . . . 3
Linearization . . . 4
Special functions . . . 4
Datalog functions . . . 4
Application examples for level measurements . . . 5
Application examples for flow measurements . . . 6
System integration HART . . . 7
System integration PROFIBUS DP . . . 7

Input . . . 8
Sensor inputs . . . 8

Output . . . 9
Analog outputs . . . 9
Relay outputs . . . 9
PROFIBUS DP interface . . . 10

Auxiliary energy . . . 10
Supply voltage/Power consumption/Current consumption . . . 10
Galvanic isolation . . . 10
Fuse . . . 10

Electrical connection . . . 11
Terminal compartment of the field housing . . . 11
Cable entries of the field housing . . . 11
Terminal compartment of the DIN-rail housing . . . 12
Terminals . . . 13
Terminal assignment . . . 13
Connection of the sensors FDU9x . . . 16
Synchronization line . . . 17
Connection of the separate display and operating module . . . 17

Performance characteristics . . . 18
Reference operating conditions . . . 18
Measuring uncertainty . . . 18
Typical accuracy . . . 18
Measured value resolution . . . 18
Measuring frequency . . . 18

Ambient conditions . . . 18
Ambient temperature . . . 18
Storage temperature . . . 18
Climate class . . . 18
Vibration resistance . . . 18
Ingress protection . . . 18
Electromagnetic compatibility (EMC) . . . 18

Mechanical construction . . . 19
Housing versions . . . 19
Dimensions of the field housing . . . 19
Dimensions of the DIN-rail housing . . . 20
Dimensions of the separate display and operating module . . . 21
Weight . . . 21
Materials . . . 21

Human interface . . . 22
Display and operating module . . . 22
Operating menu . . . 22
Quick Setup . . . 22
Locking the instrument . . . 22

Certificates and Approvals . . . 23
CE mark . . . 23
Hazardous approvals . . . 23
External standards and guidelines . . . 23

Ordering information . . . 24
Product structure . . . 24
Scope of delivery . . . 24

Accessories . . . 25
Commubox FXA191 HART . . . 25
Commubox FXA195 HART . . . 25
Commubox FXA291 IPC . . . 25
Protection cover for the field housing . . . 25
Mounting plate for the field housing . . . 25
Mounting bracket . . . 26
Adaption plate for remote display . . . 26
Overvoltage protection (in NEMA 4X/IP66 housing) . . . 26

Supplementary documentation . . . 27
Innovation booklet . . . 27
Technical Information . . . 27
Operating instructions (for FMU90 transmitter) . . . 27
Description of Instrument Functions . . . 27
Safety Instructions (XA) . . . 27
Control Drawings (ZD) . . . 27

Function and system design

Measuring principle

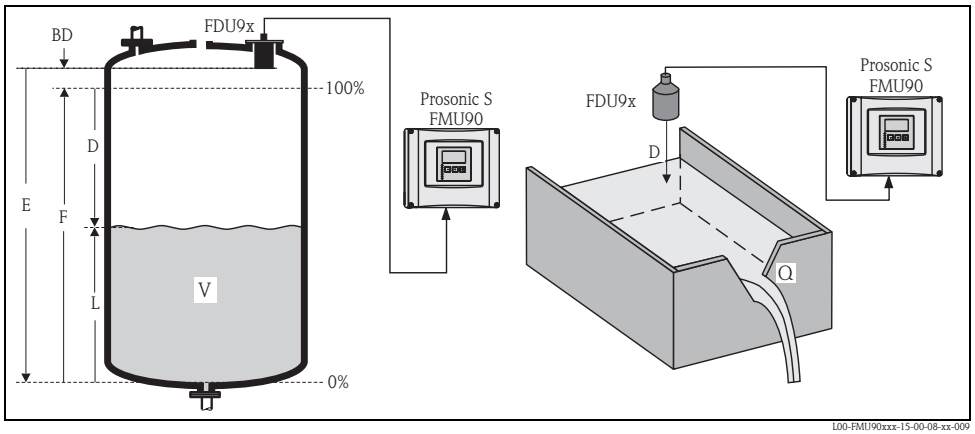

BD: blocking distance; **D:** distance from sensor membrane to fluid surface; **E:** empty distance **F:** span (full distance); **L:** level; **V:** volume (or mass); **Q:** flow

The sensor transmits ultrasonic pulses in the direction of the product surface. There, they are reflected back and received by the sensor. The transmitter Prosonic S measures the time t between pulse transmission and reception. From t (and the velocity of sound c) it calculates the distance D from the sensor membrane to the product surface:

$$D = c \cdot t/2$$

From D results the desired measuring value:
- level L
- volume V
- flow Q across measuring weirs or open channels

Blocking distance

The span F may not extend into the blocking distance BD. Level echos from the blocking distance can not be evaluated due to the transient characteristics of the sensor. The blocking distances of the individual sensors are given in the following documents:

- TI 396F for the sensors FDU 91/91F/92/93/95/96
- TI 189F for the sensors FDU 80/80F/81/81F/82/83/84/85/86

Time-of-flight correction

In order to compensate for temperature dependent time-of-flight changes, a temperature sensor is integrated into the ultrasonic sensors.

Interference echo suppression

The interference echo suppression feature of the Prosonic S ensures that interference echos (e.g. from edges, welded joints and internal objects) are not interpreted as a level echo.

Pump control

Individaully configurable for each pump:
- pump switching delay, e.g. to prevent overload of the power supply system
- backlash time and backlash interval, e.g. for complete draining of shafts or channels
- crust reduction at pump shaft walls by fine adjustment of the switch point

Linearization

Pre-programmed linearization curves

Types of vessels

- Horizontal, cylindrical tank
- Spherical tank
- Tank with pyramidal bottom
- Tank with conical bottom
- Tank with flat, inclined bottom

Flow curves for flumes and weirs[1]

- Khafagi-Venturi flume
- ISO-Venturi flume
- BST[2]-Venturi flume
- Parshall flume
- Palmer-Bowlus flume
- Rectangular weir
- Rectangular constricted weir
- NFX[3] rectangular weir
- NFX[3] rectangular constricted weir
- Trapezoidal weir
- V-notch weir
- BST[2] V-notch wier
- NFX[3] V-notch weir

The pre-programmed linearization curves are calculated on-line.

Linearization formula for flow measurements[1]

$Q = C (h^{\alpha} + \gamma h^{\beta})$
"h" is the upstream level. The parameters α, β, γ and C can be freely programmed by the user.

Linearization table

Consisting of up to 32 linearization points; entered manually or semi-automatically.

Special functions

- Limit detection
- Rake control
- Alternating pump control or control according to pump rate
- Totalizing of the flow volume with (resettable) counters and (non-resettable) totalizers[1]
- Triggering of a sampler by time or quantity pulses[1]
- Low flow cut off[1]
- Backwater detection in flumes[1]
- Sludge detection in flumes[1]
- Trend detection

Datalog functions

Basic version

- Peak hold indicator of the min./max. levels or flows and the min./max. temperatures at the sensor
- Recording of the last 10 alarms
- Indication of the operating status
- Trend indication of the outputs on the on-site display
- Indication of the operating hours

1) For instrument versions with flow software (FMU90 – *2**********)
2) BST: British Standard
3) French standard NFX 10-311

Application examples for level measurements

Level measurement with limit detection and alarm output

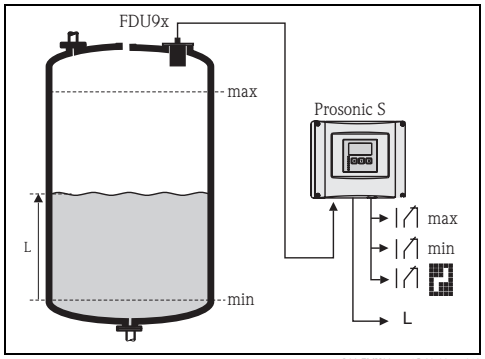

L00-FMU90xxx-15-00-00-xx-010

Order code e.g.: FMU90 - *1***131****
(1 input, 3 relays, 1 output)

Average level measurement

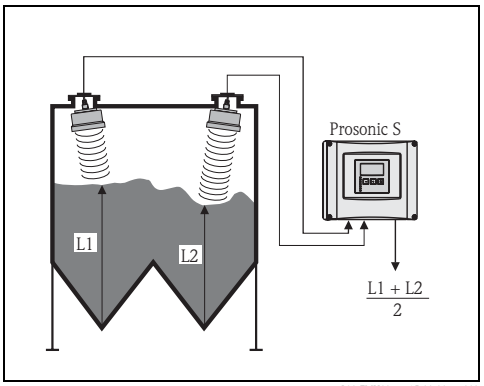

L00-FMU90xxx-15-00-00-xx-003

Order code e.g.: FMU90 - *1***212****
(2 inputs, 2 outputs)

Rake control (differential measurement)

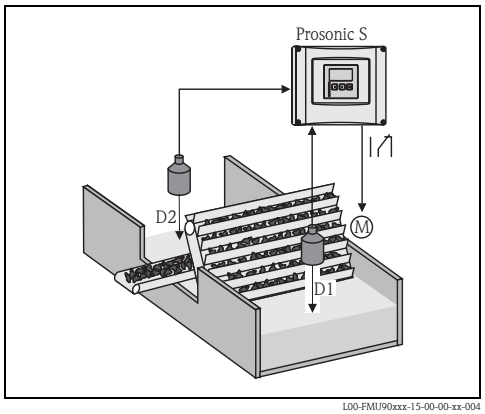

L00-FMU90xxx-15-00-00-xx-004

Order code e.g.: FMU90 - *1***212****
(2 inputs, 1 relay, 2 outputs)

Alternating pump control (up to 6 pumps)

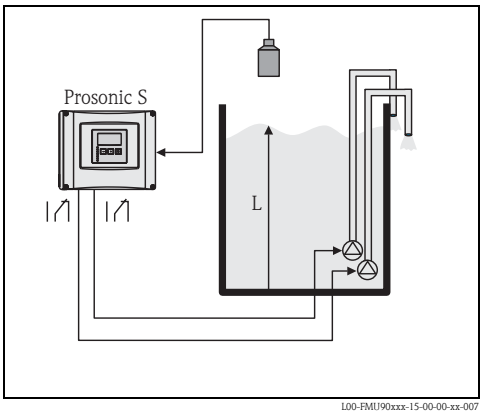

L00-FMU90xxx-15-00-00-xx-007

Order code e.g.: FMU90 - *1***131****
(1 input, 3 relays)

Conveyor belt

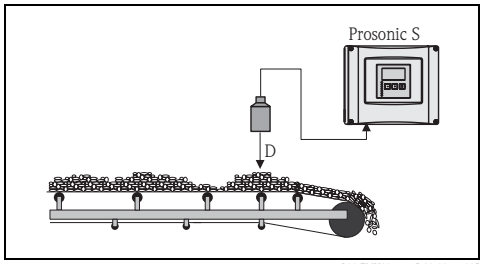

L00-FMU90xxx-15-00-00-xx-005

Order code e.g.: FMU90 - *1***111****
(1 input, 1 output)

Application examples for flow measurements

Pulses for volume counter + time pulses (e.g. for sampler)

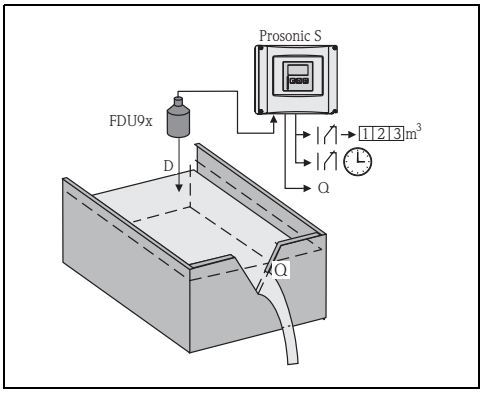

L00-FMU90xxx-15-00-00-xx-011

Order code e.g.: FMU90 - *2***131****
(1 input, 3 relays, 1 output)

Flow measurement with backwater alarm or sludge detection

If the ratio "downstream level: upstream level" rises above or falls below a critical value, an alarm will be generated.

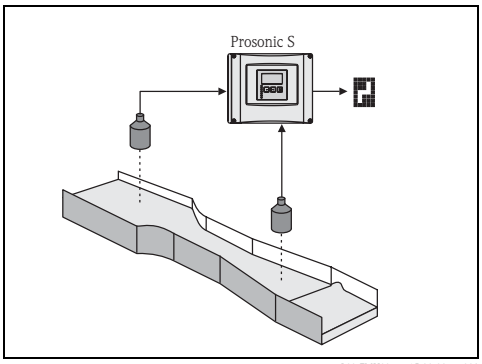

L00-FMU90xxx-15-00-00-xx-008

Order code e.g.: FMU90 - *2***212****
(2 inputs, 1 relay, 2 outputs)

Stormwater overflow bassin

Simultaneous measurement of level L and flow Q with 1 sensor.

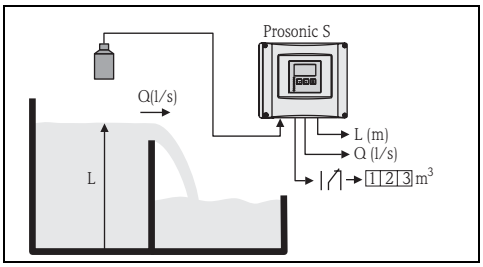

L00-FMU90xxx-15-00-00-xx-006

Order code e.g.: FMU90 - *2***112****
(1 input, 2 outputs)

Solar powered open channel flow measurement with data logging

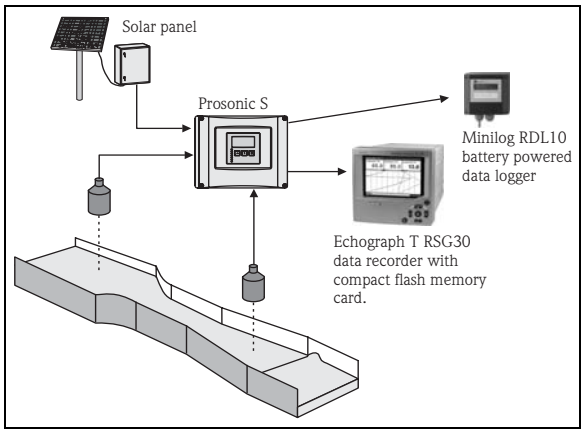

Order code e.g.: FMU90 - *2***212****
(2 inputs, 1 relay, 2 outputs)

System integration HART

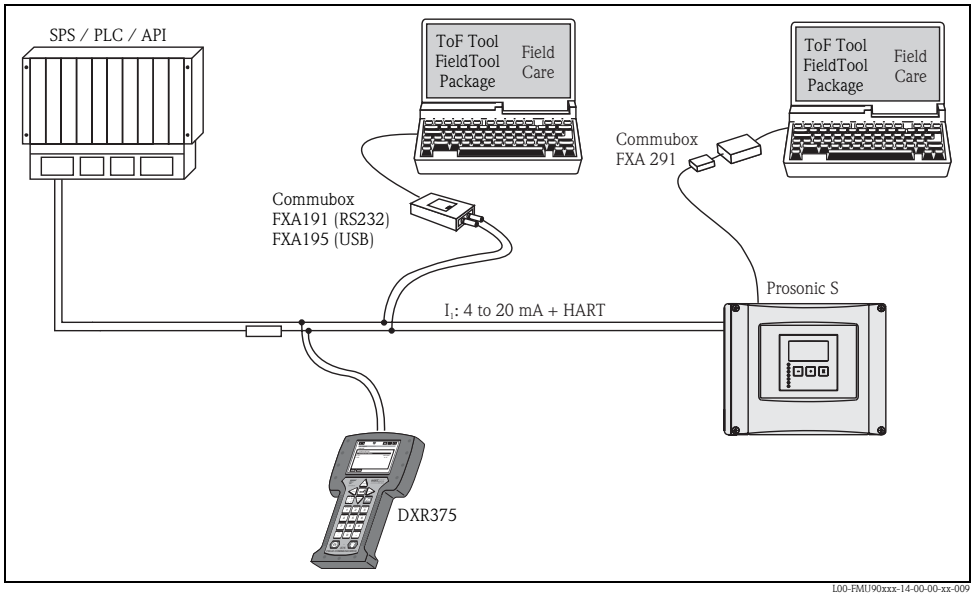

In the standard version a HART signal is superimposed onto the first output current. In order to use the HART communication, the circuit must contain a communication resistor of 250Ω.

Operating options

- via the operating and display module at the Prosonic S (if present)
- via the service interface of the Prosonic S with the Commubox FXA291 and the operating program "ToF Tool – FieldTool Package" or "FieldCare"
- via the HART protocol, e.g. with the Commubox FXA191 or FXA195 and the operating program "ToF Tool – FieldTool Package" or "FieldCare"
- via the HART handheld terminal DXR375

System integration PROFIBUS DP

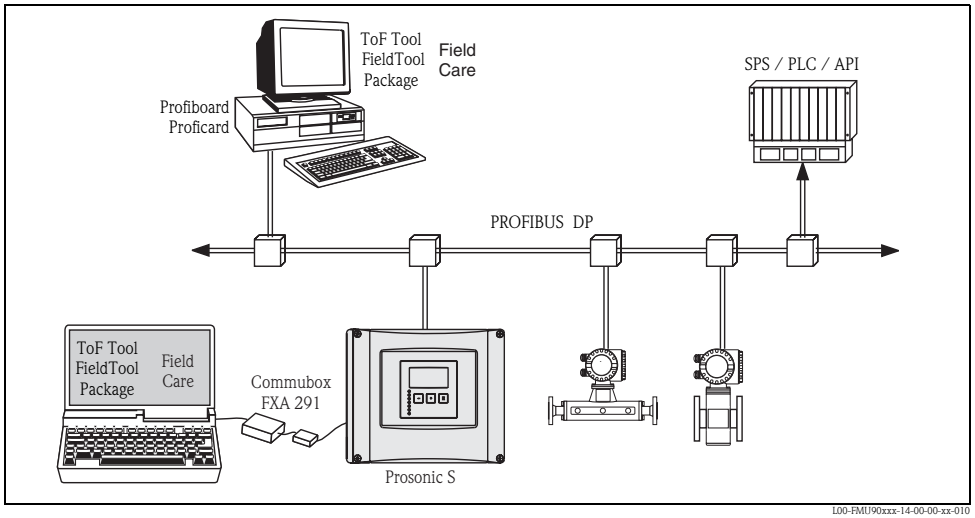

Operating options

- via the display and operating module at the Prosonic S
- via the service interface with the Commubox FXA291 and the operating program "ToF Tool – FieldTool Package" or "FieldCare"
- via PROFIBUS DP with Profiboard or Proficard and the operating program "ToF Fool – FieldTool Package" or "FieldCare"

Input

Sensor inputs

Depending on the instrument version, 1 or 2 of the sensors FDU91, FDU92, FDU93, FDU95 and FDU96 can be connected. The Prosonic S identifies these sensors automatically.

Sensor	FDU91 FDU91F	FDU92	FDU93	FDU95	FDU96
max. range[1] in liquids, ft (m)	33 (10)	66 (20)	82 (25)	–	–
max. range[1] in solids, ft (m)	16 (5)	33 (10)	50 (15)	147 (45)	230 (70)

1) This table gives the maximum range. The range depends on the measuring conditions. For an estimation see Technical Information TI 396F, chapter "Input".

In order to support existing installations, the sensors from the former series FDU8x can be connected as well. The type of sensor must be entered manually.

Sensor	FDU80 FDU80F	FDU81 FDU81F	FDU82	FDU83	FDU84	FDU85	FDU86
max. range[1] in liquids, ft (m)	16 (5)	29 (9)	66 (20)	82 (25)	–	–	–
max. range[1] in solids, ft (m)	7 (2)	16 (5)	33 (10)	50 (15)	82 (25)	147 (45)	230 (70)

1) This table gives the maximum range. The range depends on the measuring conditions. For an estimation see Technical Information TI 189F, chapter "Planning Recommendations".

Warning!
The sensors FDU83, FDU84, FDU85 and FDU86 with an ATEX, FM or CSA certificate are not certified for connection to the transmitter FMU90.

Output

Analog outputs

Number	1 or 2, depending on instrument version
Output signal	Configurable at the instrument: ■ 4 to 20 mA with HART[1] ■ 0 to 20 mA without HART
Signal on alarm	■ for setting 4 to 20 mA, selectable: – -10% (3.6 mA) – 110% (22 mA) – HOLD (last current value is held) – user specific ■ for setting 0 to 20 mA: – 110% (21.6 mA) – HOLD (last current value is held) – user specific
Output damping	Freely selectable, 0 to 1000 s
Load	Max. 600 Ω, influence negligible
max. ripple	U_{SS} = 200 mV at 47 to 125 Hz (measured at 500Ω)
max. noise	U_{eff} = 2.2 mV at 500 Hz to 10 kHz (measured at 500Ω)

1) The HART signal is assigned to the first analog output. The second analog output does not carry a HART signal. All parameters from both sensors can be accessed via the first HART output.

Relay outputs

Number	1, 3 or 6; depending on the instrument version
Type	Potential-free relay, SPDT, can be inverted
Assignable functions	■ limit (inband, out-of-band, trend, level limit) ■ counting pulse (pulse width adjustable) ■ time pulse (pulse width adjustable) ■ alarm/diagnosis (e.g. indication of backwater[1], sludge[1], echo loss etc.) ■ pump control (alternating/fixed limit/pump rate) ■ rake control (difference or relative measurement) ■ fieldbus relay (to be switched directly from Profibus-DP bus)
Switching power	■ DC voltage: 35 V_{DC}, 100 W ■ AC voltage: 4 A, 250 V, 100 VA at cosφ = 0.7
State on error	Selectable: ■ HOLD (last value is held) ■ energized ■ de-energized ■ present value is used
Behavior after power failure	Switch-on delay selectable
LEDs[2]	A yellow LED on the front panel is allocated to each relay, which lights if the relay is energized. The LED of an alarm relay lights during normal operation. The LED for a pulse relay briefly flashes at every pulse.

1) For instrument versions with flow software (FMU90 - *2**********)

2) For instrument versions with display and operating module

PROFIBUS DP interface

Profile	3.0
Transmittable values	■ main value (level or flow, depending on the instrument version) ■ distances ■ counters ■ temperatures ■ average/difference/sum ■ relay status ■ rake control ■ pump control
Function blocks	■ 10 Analog Input Blocks (AI) ■ 10 Digital Input Blocks (DI) ■ 10 Digital Output Blocks (DO)
Supported baud rates	■ 9.6 kbaud ■ 19.2 kbaud ■ 45.45 kbaud ■ 93.75 kbaud ■ 187.5 kbaud ■ 500 kbaud ■ 1.5 Mbaud ■ 3 Mbaud ■ 6 Mbaud ■ 12 Mbaud
Addressing	via dip switches at the instrument or via software (e.g. ToF Tool)

Auxiliary energy

Supply voltage/ Power consumption/ Current consumption

Instrument version	Supply voltage	Power consumption	Current consumption
AC voltage (FMU90 – ****A*******)	90 to 253 V_{AC} (50/60 Hz)	max. 23 VA	max. 100 mA at 230 V_{AC}
DC voltage (FMU90 – ****B*******)	10.5 to 32 V_{DC}	max. 14 W (typically 8 W)	max. 580 mA at 24 V_{DC}

Galvanic isolation

The following terminals are galvanically isolated from each other:
- auxiliary energy
- sensor inputs
- analog output 1
- analog output 2
- relay outputs
- bus connection (PROFIBUS DP)

Fuse

- 2 A T /DC
- 400 mA T /AC

accesible in the terminal compartment

Electrical connection

Terminal compartment of the field housing

The field housing has a separate terminal compartment. It can be opened after loosening the four screws in the lid.

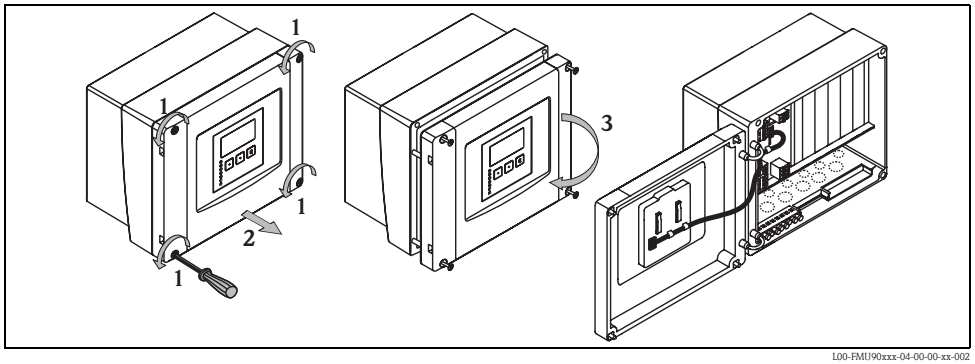

L00-FMU90xxx-04-00-00-xx-002

For easier wiring, the lid can be completely removed by unplugging the display plug (1) and pulling off the hinges (2):

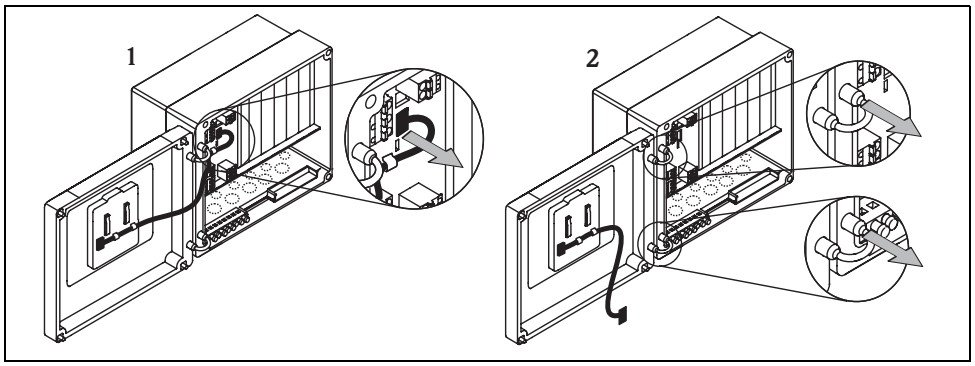

L00-FMU90xxx-04-00-00-xx-009

Cable entries of the field housing

On the bottom of the housing the following openings for cable entries are prestamped:
- M20 x 1.5 (10 openings)
- M16 x 1.5 (5 openings)
- M25 x 1.5 (1 opening)

A suitable cutting device must be used for cutting out the openings.

Terminal compartment of the DIN-rail housing

Single instrument

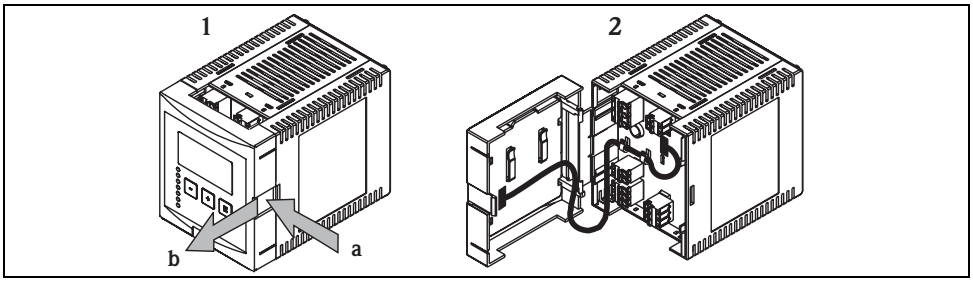

I00-fmu90xxx-04-00-00-xx-003

The catch can be unlocked by slightly pressing onto the clip. Then, the cover of the terminal compartment can be opened.

Several instruments mounted side by side

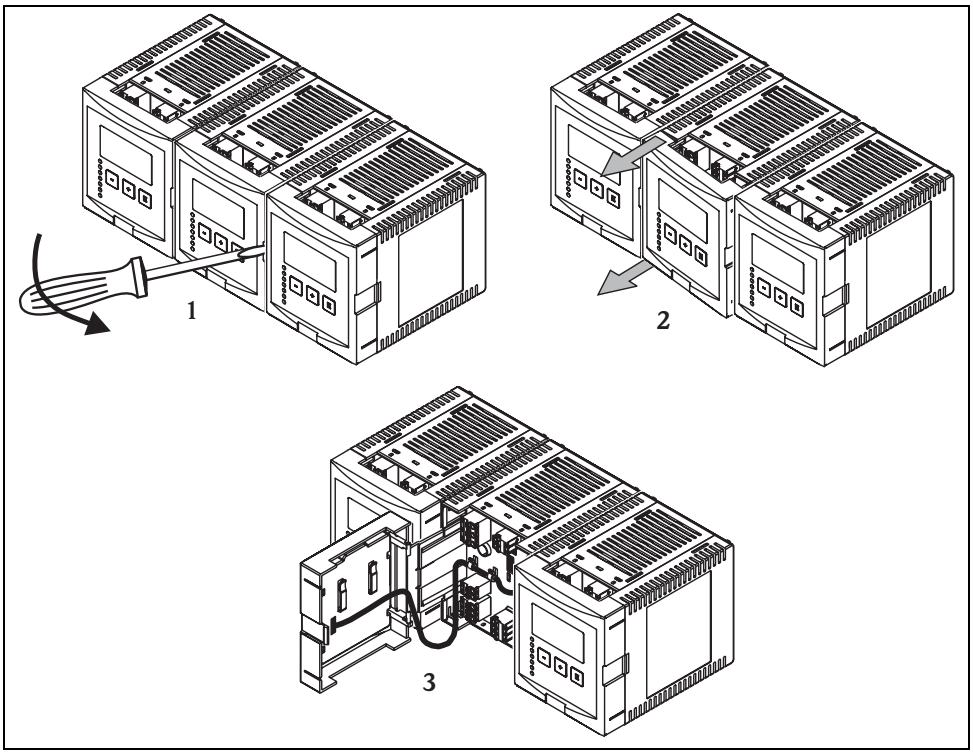

L00-FMU90xxx-04-00-00-xx-012

1. Open the catch of the cover (e.g. by a screwdriver).
2. Pull the cover out by approx. 1" (2 cm).
3. The cover can now be opened.

Note!
The cables can be inserted into the housing from above or from below.

Terminals

Pluggable spring-force terminals for connection of the cables are supplied in the terminal compartment. Rigid conductors or flexible conductors with cable and sleeve can directly be inserted and are contacted automatically.

Conductor cross section	16 to 18 AWG (0.2 mm^2 - 2.5 mm^2)
Cable and sleeve cross section	0.0004" to 0.004" (0.25 mm^2 - 2.5 mm^2)
min. stripping length	0.4" (10 mm)

Terminal assignment

Pluggable spring-force terminals for connection of the cables are supplied in the terminal compartment. Rigid conductors or flexible conductors with cable sleeve can directly be inserted and are contacted automatically.

Conductor cross section	16 to 18 AWG (0.2 mm^2 - 2.5 mm^2)
Cable and sleeve cross section	0.0004" to 0.004" (0.25 mm^2 - 2.5 mm^2)
min. stripping length	0.4" (10 mm)

The terminal configuration depends on the instrument version ordered. There is a basic terminal area, which is present in every instrument version. Additonal optional terminal areas are only present if the respective option has been selected in the product structure.

Terminal area		present for the following instrument versions
Basic area	A	for all versions
Optional areas	B	for instrument versions with 2 sensor inputs and/or 2 analog outputs (FMU90 - *****2****** and/or FMU90 - *******2****)
	C	for instrument versions with 3 or 6 relays (FMU90 - ******3***** oder FMU90 - ******6*****)
	D	for instrument versions with PROFIBUS DP interface (FMU90 - *******3****)

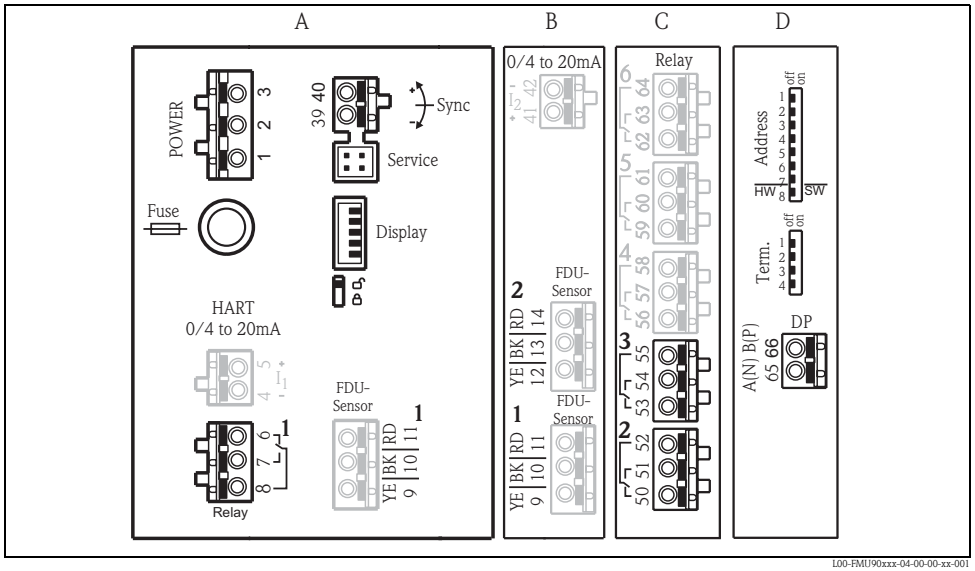

Terminals of the Prosonic S; the terminals depicted in grey are not present in every instrument version.
A: Basic terminal area; **B-D:** Optional terminal areas (present if the respective option has been selected in the product structure)

Note!
The depticted switching states of the relays refer to the de-energized state.

Terminals	Meaning	Terminal area	Remarks
Auxiliary energy			
1, 2	Auxiliary energy	A	depending on instrument version: ■ 90 to 253 V_{AC} ■ 10.5 to 32 V_{DC}
3	Potential equalization	A	
Analog outputs			
4, 5	Analog output 1; 4 to 20 mA with HART/ 0 to 20 mA w/o HART	A	**not** present for the PROFIBUS DP version
41, 42	Analog output 2 (optional); 4 to 20 mA/ 0 to 20 mA	B	only for the version with two analog outputs; no HART signal at this output
Relay outputs			
6, 7, 8	Relay 1	A	
50, 51, 52	Relay 2 (optional)	C	only for the versions with 3 or 6 relays
53, 54, 55	Relay 3 (optional)	C	only for the versions with 3 or 6 relays
56, 57, 58	Relay 4 (optional)	C	only for the version with 6 relays
59, 60, 61	Relay 5 (optional)	C	only for the version with 6 relays
62, 63, 64	Relay 6 (optional)	C	only for the version with 6 relays
Bus communication			
65	PROFIBUS A (RxT/TxD-N)	D	only for the PROFIBUS DP version
66	PROFIBUS B (RxT/TxD-P)	D	
Synchronization			
39, 40	Synchronization	A	see section 4.6, "Synchronization line"
Level inputs			
9 (YE), 10 (BK), 11 (RD)	Sensor 1 (FDU8x/9x) YE: yellow strand BK: black strand RD: red strand	■ A: for versions with 1 sensor input ■ B: for versions with 2 sensor inputs[1]	
12 (YE), 13 (BK), 14 (RD)	Sensor 2 (FDU8x/9x) (optional) YE: yellow strand BK: black strand RD: red strand	B	only for the version with 2 sensor inputs

1) In this case, terminals 9/10/11 are not present on terminal area A.

Warning!
When using the main public power supply, an easily accesible power switch must be installed in the proximity of the device. The power switch must be marked as a disconnector for the device (IEC/EN 61010)

Note!
- In order to avoid interference signals, the sensor cables should not be laid parallel to high voltage or electric power lines.
- The cables may not be laid in the proximity to frequnecy converters.

Additional elements on the terminal areas

Designation	Meaning/Remarks
Fuse	Fuse: 2 A T /DC or 400 mA T/AC
Display	Connection of the display or the remote display and operating module (see chap. 4.7)
Service	Service interface for connection of a PC/Notebook via Commubox FXA291 (see chap. 5.1)
	Locking switch, see chap. 5.5.3
Term.	Bus termination (only applicable for instruments with PROFIBUS interface)
Address	Bus address (only applicable for instruments with PROFIBUS interface)

Connection of the sensors FDU9x

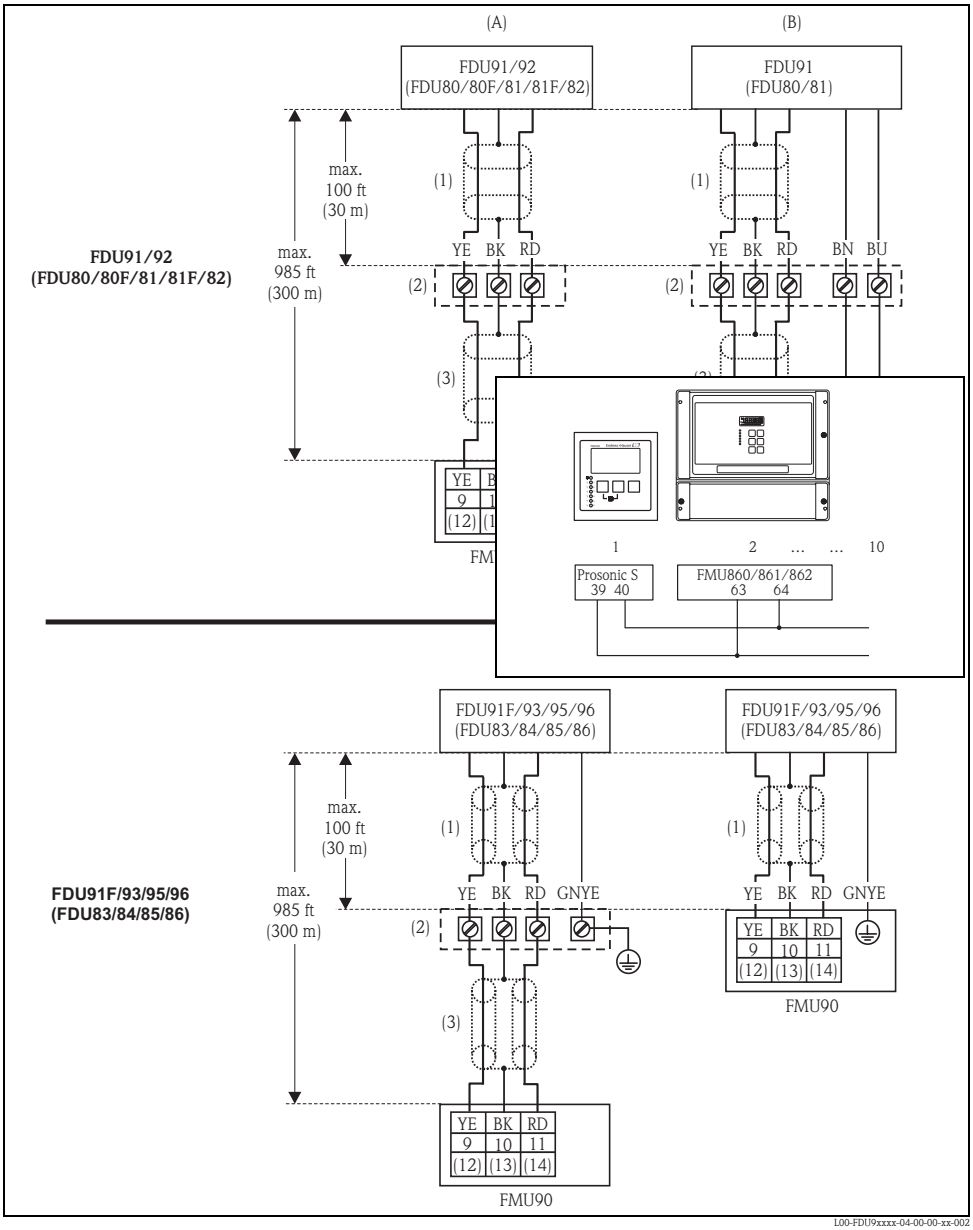

(A): Terminal box (recommended for cable lengths > 100 ft / 30 m); **(B):** Grounding at the terminal box; **(C):** Grounding at the transmitter or in the control room; **(1):** Terminals for sensor input 1 at the FMU9x; **(2):** Terminals for sensor input 2 at the FMU9x (optional)

For details, refer to Technical Information TI 396F.

Synchronization line

- If wiring several Prosonic S, which are mounted in a common cabinet and if the sensor cables run in parallel, the synchronization terminals (39 and 40) must be interconnected.
- Up to 20 instruments can be synchronized in this way.
- If there are more than 20 instruments, groups must be formed, each containing a maximum of 20 instruments. For the instruments within each group, the sensor cables may run in parallel. The sensor cables of different groups must be seperated from each other.
- Usual commercial shielded cable can be used for synchronization
  - max. length: 33 ft (10 m) between the individual instruments
  - cross section: 2 x (0.75 - 2.5 mm^2)
  - for lengths up to 3 ft (1 m), an unshielded cable can be used; for lenghts exceeding 3 ft (1 m), shielding is required. The shield must be connected to ground
- Instruments of the Prosonic FMU86x family can be connected to the synchronization line as well. In this case, a maximum of 10 instruments can be connected to each synchronization line.

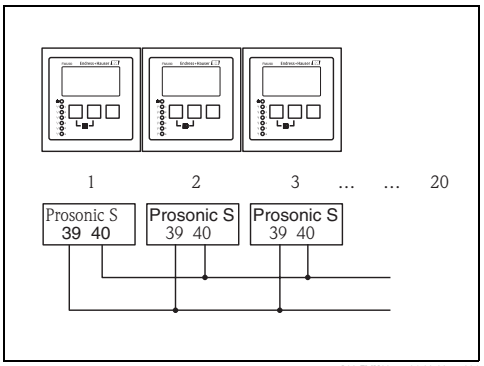

L00-FMU90xxx-04-00-00-xx-004

Connection the remote display and operating module

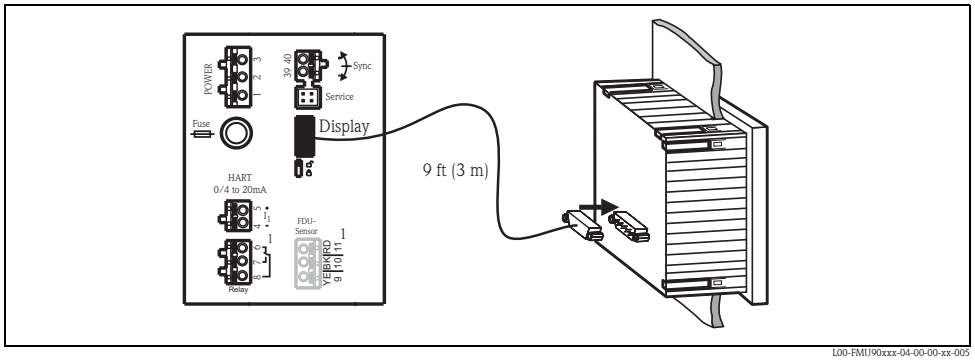

L00-FMU90xxx-04-00-00-xx-005

For the version of the Prosonic S with a remote display for panel mounting, a pre-assembled connecting cable (10ft / 3 m) is supplied. The cable must be connected to the display plug of the Prosonic S.

Note!
Minimum diameter for cable bushing: 0.78" (2 cm)

Performance characteristics

Reference operating conditions	■ Temperature = 75 ± 41°F (24 ± 5°C) ■ Pressure = 14 ± 1.5 psi (960 ± 100 mbar) ■ Relative humidity = 60 ± 15 % ■ Ideally reflecting surface, sensor vertically aligned (e.g. calm, plane liquid surface of 10 ft^2 / 1 m^2) ■ No interference echoes within the signal beam ■ Settings of the application parameters: – tank shape = flat ceiling – medium property = liquid – process condition = calm surface
Measuring uncertainty[1]	±0.2 % of the maximum span of the sensor
Typical accuracy[2]	±0.08" (±2 mm) + 0.17 % of the measured distance
Measured value resolution	0.04" (1 mm) with FDU91
Measuring frequency	Max. 3 Hz The exact value depends on the settings of the application parameters and the instrument version (1- or 2-channel).

Ambient conditions

Ambient temperature	-40 to +140°F (-40 to 60°C) The functionality of the LC display becomes restricted at T_U < -20°C. If the device is operated outdoors in strong sunlight, a protective cover should be used (s. chapter "Accessories").
Storage temperature	-40 to +140°F (-40 to 60°C)
Climate class	■ **Field housing:** according to DIN EN 60721-3 4K2/4K5/4K6/4Z2/4Z5/4C3/4S4/4M2 (DIN 60721-3 4K2 corresponds to DIN 60654-1 D1) ■ **Housing for DIN rail mounting:** according to DIN EN 60721-3 3K3/3Z2/3Z5/3B1/3C2/3S3/3M1 (DIN 60721-3 3K3 corresponds to DIN 60654-1 B2)
Vibration resistance	■ Housing for DIN rail: DIN EN 600068-2-64 / IEC 68-2-64; 20 to 20000 Hz; 0.5 $(m/s^2)^2$/Hz ■ Field housing: DIN EN 600068-2-64 / IEC 68-2-64; 20 to 20000 Hz; 1.0 $(m/s^2)^2$/Hz
Ingress protection	■ Field housing: NEMA 4x (IP66) ■ Housing for DIN rail: NEMA 1 (IP20) ■ separate display: – NEMA 4 / IP65 (front panel , if mounted in cabinet door) – NEMA 1 / IP20 (rear panel, if mounted in cabinet door)
Electromagnetic compatibility (EMC)	■ Interference emmission to EN 61326; Equipment class A ■ Interference immunity to EN 61326; Annex A (Industrial) and NAMUR recommendation EMC (NE21)

1) according to NAMUR EN 61298-2
2) after calibration

Mechanical construction

Housing versions

- Field housing; optionally with integrated display and operating module
- Housing for top-hat rail mounting; optionally with intergrated display and operating module
- Housing for top-hat rail mounting with separated display and operating module for cabinet door mounting

Dimensions of the field housing

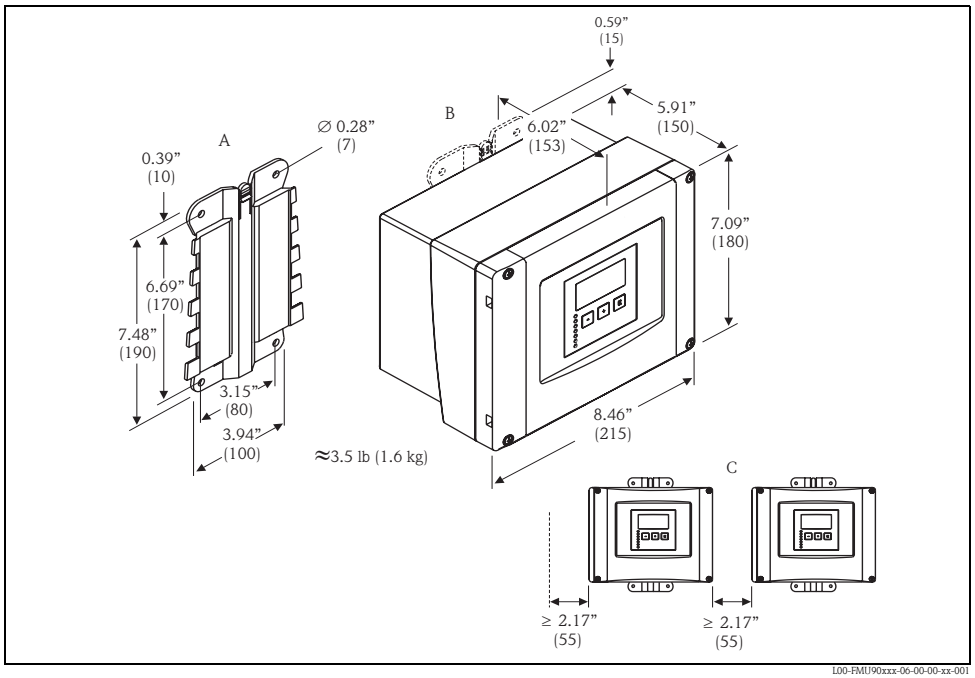

Dimensions in inches (mm)
A: Mounting plate (supplied), can also be used as drilling template; **B:** Field housing; **C:** minimum mounting distance

The dimensions of the field housing are the same for all instrument versions.
To open the housing, a minimum mounting distance of 2.17" (55 mm) is required on the left.

Note!
The mounting plate must be mounted on a plane surface and must not become bent. Otherwise the mounting of the field housing may be difficult or impossible.

Dimensions of the DIN-rail housing

The dimensions of the DIN-rail housing depend on the instrument version. The version determines which terminal areas the Prosonic S contains. The dimensions are influenced by the following features of the product structure (see chapter 2.3):

- 60: Level Input
- 70: Switch Output
- 80: Output

In order to determine the dimensions of a specific version, perform the following steps (see the example on page 21):

1. Using the product structure, determine the options of the features 60, 70 and 80 of the instrument version in question.

	10	20	30	40	50	**60**	**70**	**80**	90	100	110	120
FMU90 -												

2. Using the following table, determine how many optional terminal areas this instrument version contains.

Feature and option of the product structure	**corresponds to the following terminal area**	**present? yes = 1 no = 0**
feature 60; option 2 and/or feature 80, option 2	2 sensor inputs and/or 2 analog outputs	
feature 70, option 3 or 6	3 o 6 relays	
feature 80, option 3	PROFIBUS DP interface	
	Sum =	

3. The appropriate dimensions are given in the following diagram:

Sum = 0
(only basic terminal area)

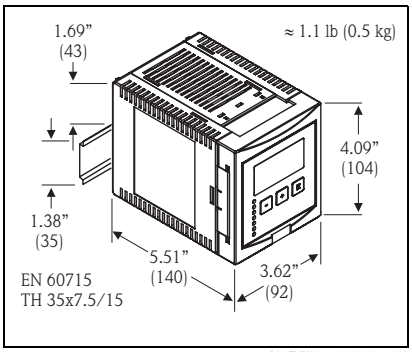

Dimensions in inches (mm)

Sum = 1, 2 or 3
(1-3 optional terminal areas)

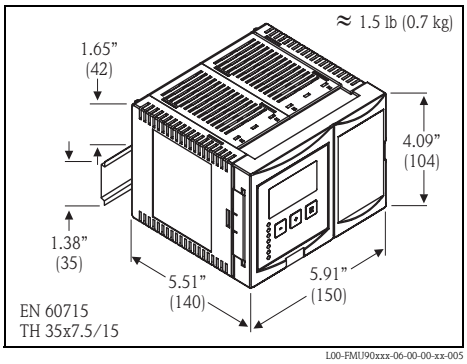

Dimensions in inches (mm)

Example

	10	20	30	40	50	**60**	**70**	**80**	90	100	110	120
FMU90 -	R	1	2	A	A	2	3	2	A	A	1	A

feature and option of the product structure	**corresponds to the following terminal area**	**present?**
feature 60; option 2 and/or feature 80, option 2	2 sensor inputs and/or 2 analog outputs	1 (yes)
feature 70, option 3 or 6	3 or 6 relays	1 (yes)
feature 80, option 3	PROFIBUS DP interface	0 (no)
	Sum =	2

Sum = 2
=> 4.1" x 5.9" x 5.5" (104 mm x 150 mm x 140 mm)

Dimensions of the separate display and operating module

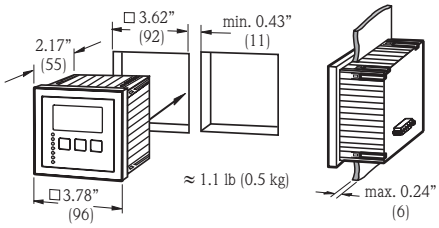

Dimensions in inches (mm)

Weight

Housing version	**Weight**
Field housing	approx.. 3.5 to 4 lb (1.6 to 1.8 kg); depending on instrument version
Housing for DIN rail	approx. 1.1 to 1.5 lb (0.5 to 0.7 kg); depending on instrument version (s. section: "Dimensions of the DIN-rail housing")
separate display and operating module	approx. 1.1 lb (0.5 kg)

Materials

- Field housing: PC
- Housing for DIN rail: PBT

Human interface

Display and operating module

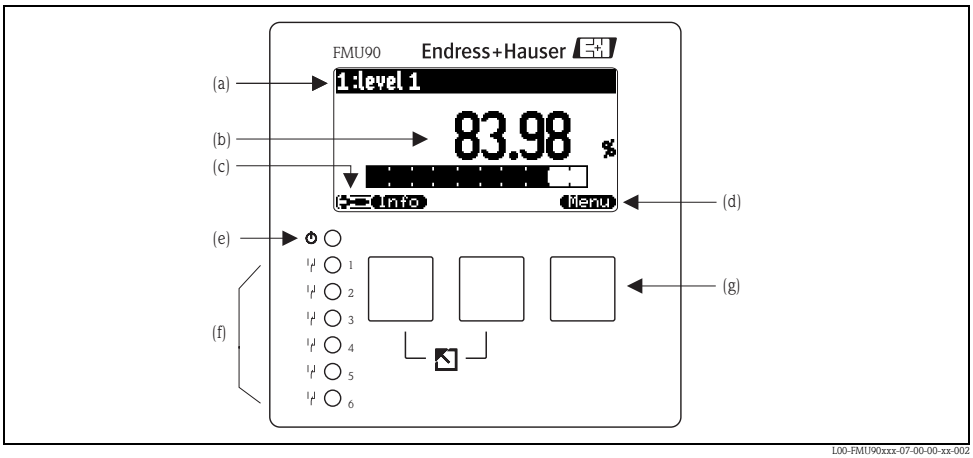

L00-FMU90xxx-07-00-00-xx-002

(a): name of the parameter; **(b):** value of the parameter, including unit; **(c):** display symbols; **(d):** softkey symbol; **(e):** LED indicating the operating state; **(f):** LEDs indicating the switching states of the relays; **(g):** keys

Display (Examples)

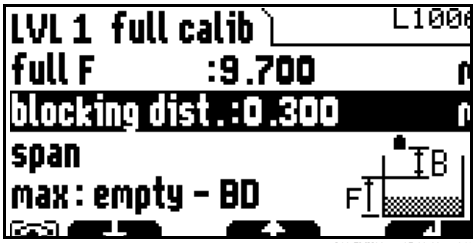

L00-FMU90xxx-07-00-00-en-041

Display of a function including help text and descriptive graphic

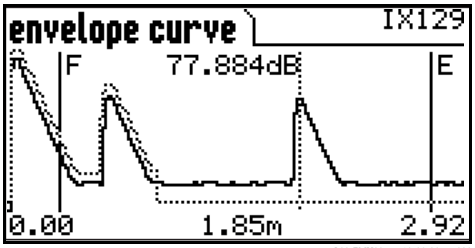

L00-FMU90xxx-19-00-00-en-089

Display of the envelope curve including the mapping. The level echo and the empty distance are marked.

Keys (softkey operation)

The function of the keys depends on the current position within the operating menu (softkey functionality). The key functions are indicated by softkey symbols in the bottom line of the display.

LEDs

- 1 LED (a) indicates the operating state ("normal operation", "alarm" or "warning")
- 6 LEDs (b) indicate the switching state of the relays (LED glows if the respective relay is energized)

Illuminated display

An illuminated display is available as an option (s. feature 40 of the product structure)

Operating menu

The Prosonic S has a dynamical operating menu. Only those functions are visible which are relevant for the instrument version and installation environment at hand.

Quick Setup

The operating menu contains Quick Setup for easy commissioning of level and flow measurements and menus for adjusting pump and rake controls. The Quick Setups and menus guide the user through the complete commissioning procedure.

Locking of the instrument

The instrument can be locked against parameter changes in the following ways:
- Locking switch in the terminal compartment
- Key combination at the operating module
- Input of a locking code via software (e.g. "ToF Tool" or "FieldCare")

Certificates and Approvals

CE mark

The measuring system meets the legal requirements of the EC-guidelines. Endress+Hauser confirms the instrument passing the required tests by attaching the CE-mark.

Ex approval

The available certificates are listed in the ordering information. Note the associated safety instructions (XA) and control or installation drawings (ZD).

Note!
Sensors FDU9x with Ex-approval can be connected to the transmitter FMU90 without Ex-approval.

External standards and guidelines

EN 60529

Protection class of housing (IP code)

EN 61326

Electromagnetic compatibility (EMC requirements)

NAMUR

Standards committee for measurement and control in the chemical industry

US Standard UL 61010-1

CSA General Purpose Units FMU9x-N********** are tested according to US standard UL 61010-1, 2nd edition

Ordering information

Product structure

10	**Approval**	
	R	Non-hazarous area
	J	ATEX II 3D
	N	CSA General Purpose
20	**Application**	
	1	Level + pump control, alternating
	2	Flow + totalizer + level + sample control + preprogrammed OCM flow curves
30	**Housing, material**	
	1	Field mounting PC, NEMA 4x (IP66)
	2	DIN rail mounting PBT, NEMA 1 (IP20)
40	**Operation**	
	C	Illuminated display + keypad
	E	Illuminated display + keypad, 3.78" x 3.78" (96x96), panel mounting, front NEMA 4 (IP65)
	K	w/o display, via communication
50	**Power supply**	
	A	90 to 253 VAC
	B	10.5 to 32 VDC
60	**Level input**	
	1	1 sensor FDU9x/FDU8x
	2	2 sensors FDU9x/FDU8x
70	**Switch output**	
	1	1 relay, SPDT
	3	3 relays, SPDT
	6	6 relays, SPDT
80	**Output**	
	1	One 0/4-20mA HART output
	2	Two 0/4-20mA HART outputs
	3	PROFIBUS DP
90	**Additional input**	
	A	w/o additional input
	B	4 limit switches + 1 temperature input, PT100/FMT131 (in preparation)
100	**Datalog function**	
	A	Basic version
110	**Languages**	
	1	de, en, nl, fr, es, it
	3	en, zh, ja (in preparation)
120	**Additional option**	
	A	Basic version
FMU90 –		complete product designation

Scope of delivery

- Instrument according to the version ordered
- Operating program: ToF Tool – FieldTool Package
- Operating Instructions (depending on communication version, see chapter "Supplementary documentation")
- For certified instrument versions: Safety Instructions (XAs) or Control Drawings (ZDs) (see chapter "Supplementary documentation")
- Field housing units for flow measurement FMU90-*21********** are delivered with 2 screws for plumbing the device

Accessories

Commubox FXA191 HART	For intrinsically safe communication with ToF Tool/FieldCare via the RS232C interface. For details refer to TI237F/00/en.
Commubox FXA195 HART	For intrinsically safe communication with ToF Tool/FieldCare via the USB interface. For details refer to TI404F/00/en.
Commubox FXA291 IPC	For intrinsically safe communication with ToF Tool/FieldCare via the service interface (IPC) of the instrument and the USB interface of a PC/Notebook.

Protection cover for the field housing

- Material: 316Ti SS/1.4571
- is mounted by the mounting help of the Prosonic S
- Order-Code: 52024477

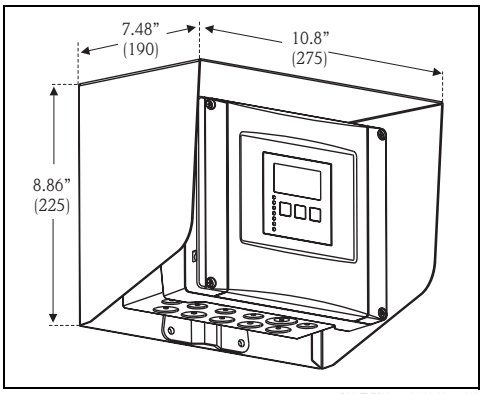

L00-FMU90xxx-06-00-00-xx-003

Mounting plate for the field housing

- Suited for the mounting help of the Prosonic S
- For 1" – 2" tubes
- Dimensions: 8.27" x 4.33" (210 mm x 110 mm)
- Material: 316Ti SS/1.4571
- Mounting clips, screws and nuts are supplied
- Order code: 52024478

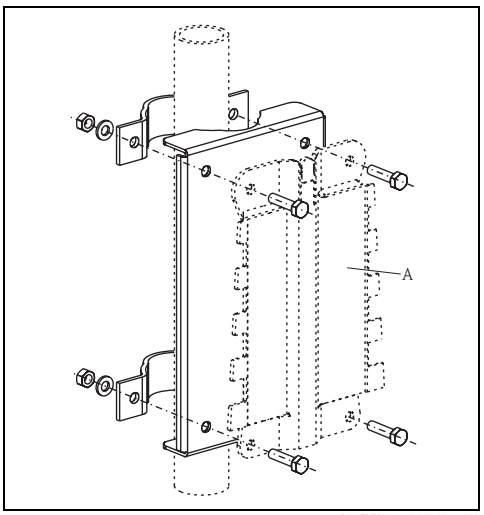

L00-FMU90xxx-00-00-00-xx-001

A: mounting plate for the field housing

Mounting bracket

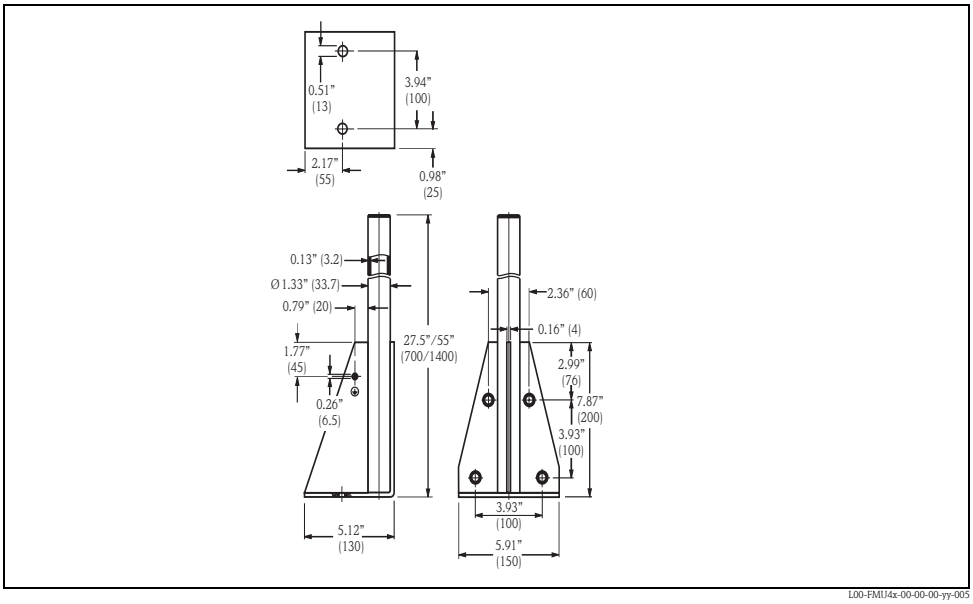

L00-FMU4x-00-00-00-yy-005

Height	Material	Order Code
27.6" (700 mm)	galv. steel	919791-0000
27.6" (700 mm)	316 Ti SS	919791-0001
55.1" (1400 mm)	galv. steel	919791-0002
55.1" (1400 mm)	316 Ti SS	919791-0003

Adaption plate for remote display

Used to mount the remote display into the opening 5.43" x 5.43" (138 mm x 138 mm) of the remote display module of the Prosonic FMU860/861/862).

Order-Code: 52027441

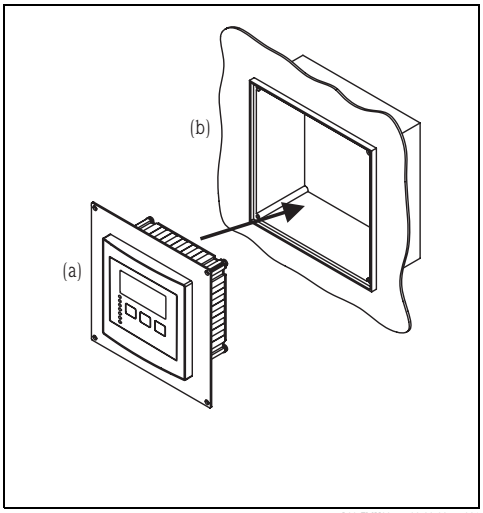

L00-FMU90xxx-00-00-00-xx-001

(a): remote display of FMU90 with adaption plate;
(b): opening of the remote display FMU860/861/862

Overvoltage protection (in NEMA 4X / IP66 housing)

- Overvoltage protection for the power supply and up to 3 signal outputs
- Dimensions of housing: 11.5" x 9.96" x 4.17" (292mm x 253 mm x 106 mm)
- Order Code: 215095-0001

Supplementary documentation

Innovation booklet

IN 003

Ultrasonic measurement – the solution for your application

Technical Information

TI 396F

Technical Information for the ultrasonic sensors FDU91/FDU92/FDU93/FDU95/FDU96

Operating instructions (for transmitter FMU90)

Depending on the instrument version, the following operating instructions are supplied with the Prosonic S FMU90 (Supplementary documentation can be downloaded from our product pages on "www.endress.com").

Operating instructions	Output	Application	Instrument version
BA 288F	HART	■ level measurement ■ alternating pump control ■ screen and rake control	FMU90 – *1*****1**** FMU90 – *2*****1**** FMU90 – *1*****2**** FMU90 – *2*****2****
BA 289F		■ flow measurement ■ backwater and dirt detection ■ totalizers and counters	FMU90 – *2*****1**** FMU90 – *2*****2****
BA 292F	PROFIBUS DP	■ level measurement ■ alternating pump control ■ screen and rake control	FMU90 – *1*****3**** FMU90 – *2*****3****
BA 293F		■ flow measurement ■ backwater and dirt detection ■ totalizers and counters	FMU90 – *2*****3****

These operating instructions describe installation and commissioning of the respective version of the Prosonic S. It contains those functions from the operating menu, which are required for a standard measuring task. Additional functions are contained in the "Descripiton of Instrument Functions" (BA 290F, see below).

Description of Instrument Functions

BA290F

Contains a detailed description of **all** functions of the Prosonic S and is valid for all instrument versions. A PDF file of this document can be found
- on the CD-ROM of the "ToF-Tool – FieldTool Package", which is supplied together with the instrument
- in the internet at "www.endress.com"

Safety Instructions (XA)

in preparation

Control Drawings (ZD)

in preparation

United States	Canada	Mexico
Endress+Hauser, Inc. 2350 Endress Place Greenwood, IN 46143 Tel. 317-535-7138 Sales 888-ENDRESS Service 800-642-8737 fax 317-535-8498 inquiry@us.endress.com www.us.endress.com	Endress+Hauser Canada 1075 Sutton Drive Burlington, ON L7L 5Z8 Tel. 905-681-9292 800-668-3199 Fax 905-681-9444 www.ca.endress.com	Endress+Hauser, México, S.A. de C.V. Av. Gustavo Baz No. 43 Fracc. Bosques de Echegaray Naucalpan de Juárez, C.P. 53310, Estado de México México Tel: (52) 55-5371-1110 Fax (52) 55-5371-1128 eh.mexico@mx.endress.com

TI397F/24/ae/11.06

Endress+Hauser
People for Process Automation